AQA

Please write clearly in block capitals.

Centre number | | | | | |  Candidate number | | | | |

Surname _____

Forename(s) _____

Candidate signature _____
I declare this is my own work.

# GCSE PHYSICS

# H

## Higher Tier  Paper 1

Thursday 22 May 2025  Morning  Time allowed: 1 hour 45 minutes

**Materials**
For this paper you must have:
- a ruler
- a scientific calculator
- the Physics Equations Sheet (enclosed).

**Instructions**
- Use black ink or black ball-point pen. Pencil should only be used for drawing.
- Fill in the boxes at the top of this page.
- Answer **all** questions in the spaces provided.
- Do not write outside the box around each page or on blank pages.
- Do all rough work in this book. Cross through any work you do not want to be marked.
- If you need extra space for your answer(s), use the lined pages at the end of this book. Write the question number against your answer(s).
- In all calculations, show clearly how you work out your answer.

**Information**
- The maximum mark for this paper is 100.
- The marks for questions are shown in brackets.
- You are expected to use a calculator where appropriate.
- You are reminded of the need for good English and clear presentation in your answers.

| For Examiner's Use | |
|---|---|
| Question | Mark |
| 1 | |
| 2 | |
| 3 | |
| 4 | |
| 5 | |
| 6 | |
| 7 | |
| 8 | |
| 9 | |
| 10 | |
| **TOTAL** | |

Do not write outside the box

Answer **all** questions in the spaces provided.

**0 1** Tides and wind are two renewable energy resources.

**0 1 . 1** Describe the difference between renewable energy resources and non-renewable energy resources.

**[2 marks]**

**Figure 1** shows a new design of tidal turbine to generate electricity using the tides.

**Figure 1**

Do not write outside the box

Use the Physics Equations Sheet to answer questions **01.2** and **01.3**.

**0 1 . 2** Write down the equation which links density ($\rho$), mass ($m$) and volume ($V$).

**[1 mark]**

_____

**0 1 . 3** The mass of seawater passing through the tidal turbine each second is 824 000 kg.

The density of seawater is 1030 kg/m$^3$.

Calculate the volume of seawater passing through the tidal turbine each second.

**[3 marks]**

_____

_____

_____

_____

_____

Volume = _____ m$^3$

**Question 1 continues on the next page**

Do not write outside the box

The speed of the tide or the speed of the wind past a turbine is called the 'flow speed'.

**Figure 2** shows how the power output of a tidal turbine compares with a wind turbine for different flow speeds.

**Figure 2**

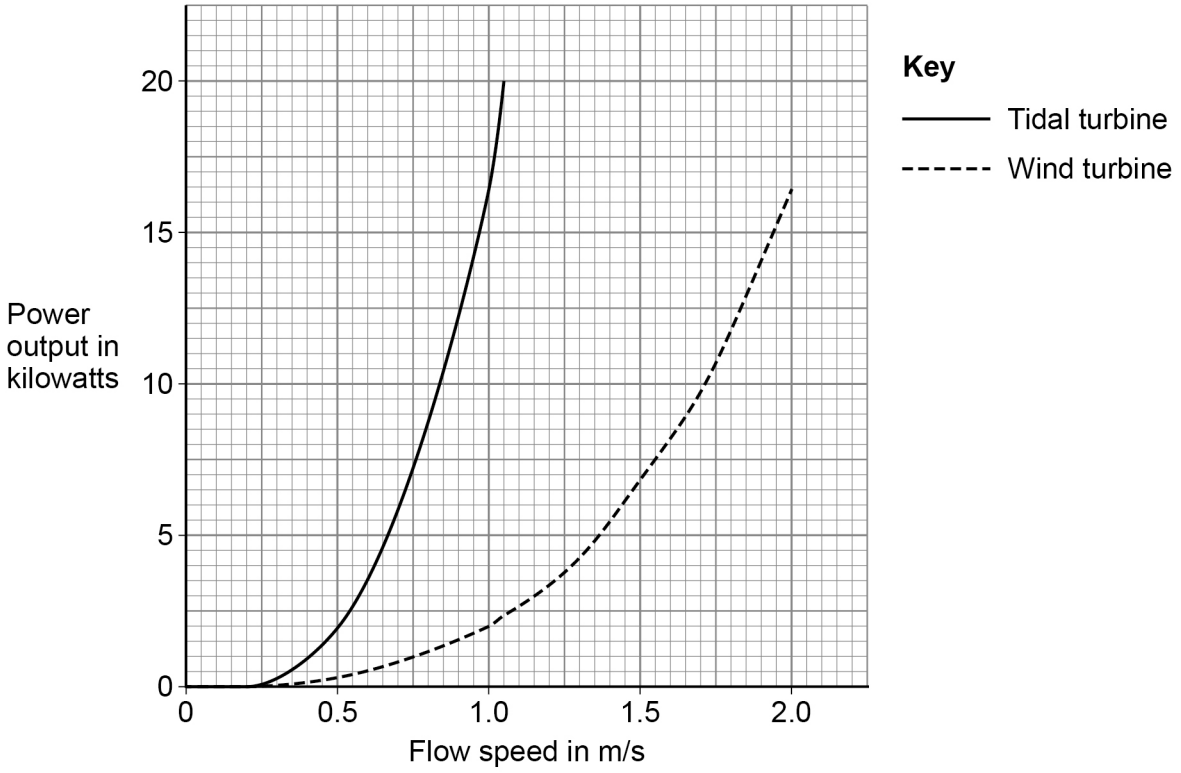


**0 1 . 4** As flow speed increases, power output increases.

Give **two** other conclusions that can be made using information from **Figure 2**.

**[2 marks]**

1 _____

_____

2 _____

_____

Do not write outside the box

**0 1 . 5** **Figure 3** shows the turbines used to obtain the data for **Figure 2**.

**Figure 3**

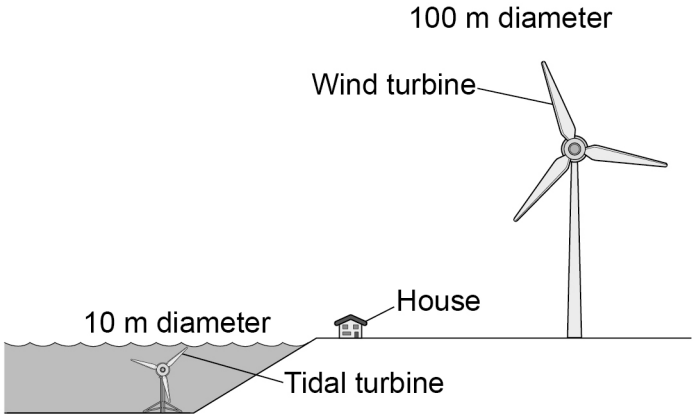


Compare the environmental impacts of the wind turbine and the tidal turbine in **Figure 3**.

**[4 marks]**

12

Do not write outside the box

**0 2** A student determined the specific heat capacity of water.

**Figure 4** shows the apparatus used.

**Figure 4**

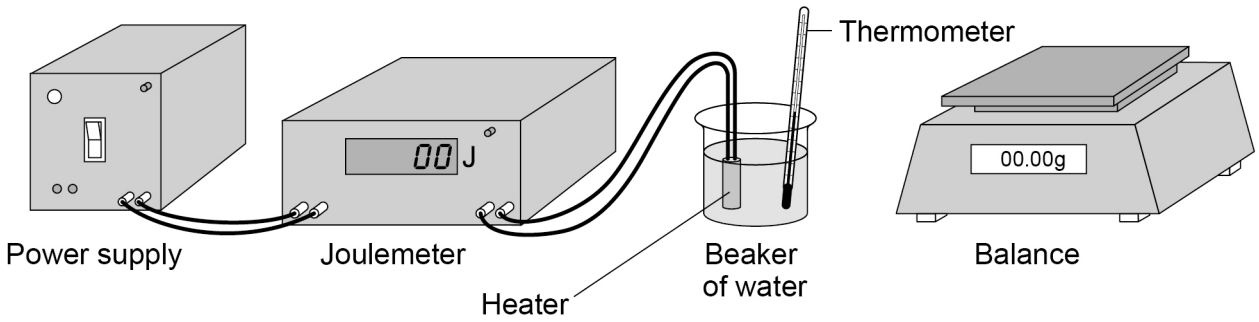


The joulemeter measures energy transfer.

**0 2 . 1** Give **one** hazard in the investigation.

**[1 mark]**

_____

_____

**0 2 . 2** Describe how the student could determine the specific heat capacity of water using the apparatus in **Figure 4**.

**[6 marks]**

_____

_____

_____

_____

_____

_____

Do not write outside the box

Extra space

**0 2 . 3** One source of error in the experiment was energy loss to the surroundings.

Suggest **one** change to the apparatus to reduce energy loss to the surroundings.

**[1 mark]**

**0 2 . 4** The student's value for the specific heat capacity of water was 4410 J/kg °C.

The actual value for the specific heat capacity of water is 4200 J/kg °C.

Calculate the percentage difference between the student's value and the actual value.

**[2 marks]**

Percentage difference = _____ %

10

Do not write outside the box

**0 3** A student investigated how the current in an LED varies with the potential difference across the LED.

**Figure 5** shows the circuit used.

**Figure 5**

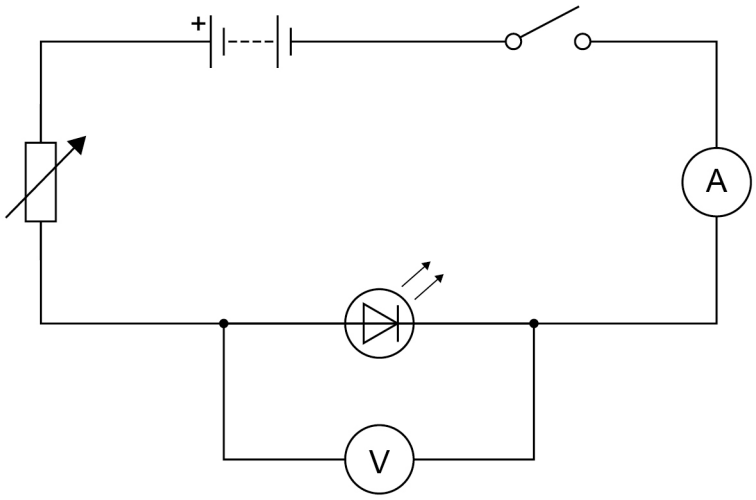


**Figure 6** shows the results.

**Figure 6**

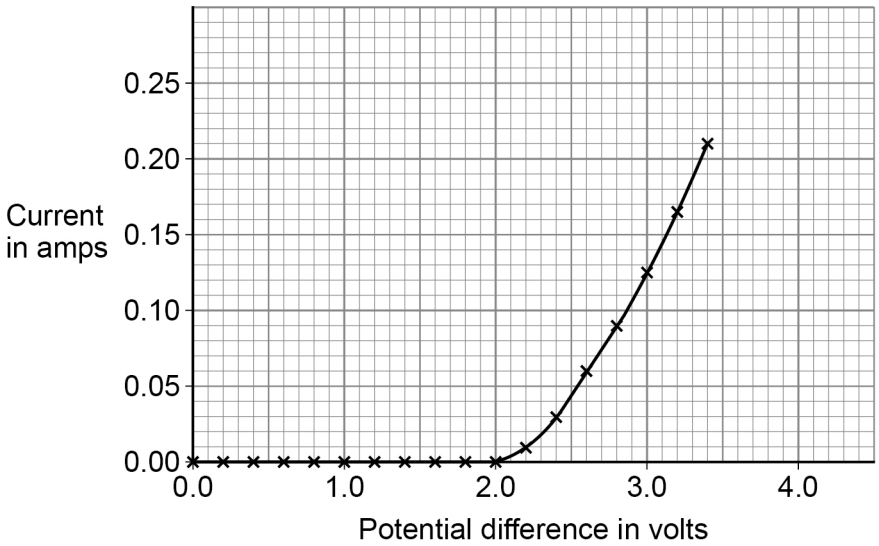


**0 3 . 1** Give **one** way the student could have varied the potential difference across the LED.

**[1 mark]**

_____

_____

Do not write outside the box

Use the Physics Equations Sheet to answer questions **03.2** and **03.3**.

**0 3 . 2** Which of the following equations links current ($I$), potential difference ($V$) and resistance ($R$)?

**[1 mark]**

Tick (✓) **one** box.

$V = I^2 \times R$ ☐

$V = I \times R$ ☐

$V = \frac{I}{R}$ ☐

$V = \frac{R}{I}$ ☐

**0 3 . 3** Determine the resistance of the LED when the potential difference across the LED was 3.0 V.

Use **Figure 6**.

**[4 marks]**

_____

_____

_____

_____

_____

_____

_____

Resistance = _____ Ω

**Question 3 continues on the next page**

Do not write outside the box

**0 3 . 4** The student reversed the connections to the power supply and varied the potential difference across the LED.

Explain why the ammeter displayed a value of 0.0 A for all the values of potential difference the student used.

**[2 marks]**

_____

_____

_____

_____

8

Do not write outside the box

**0 4** Manufacturing a car produces carbon dioxide.

**0 4 . 1** Explain **one** environmental problem caused by the emission of carbon dioxide.

**[2 marks]**

**Question 4 continues on the next page**

Do not write outside the box

**Figure 7** shows the carbon dioxide produced during the lifetime of two types of car.

**Figure 7**

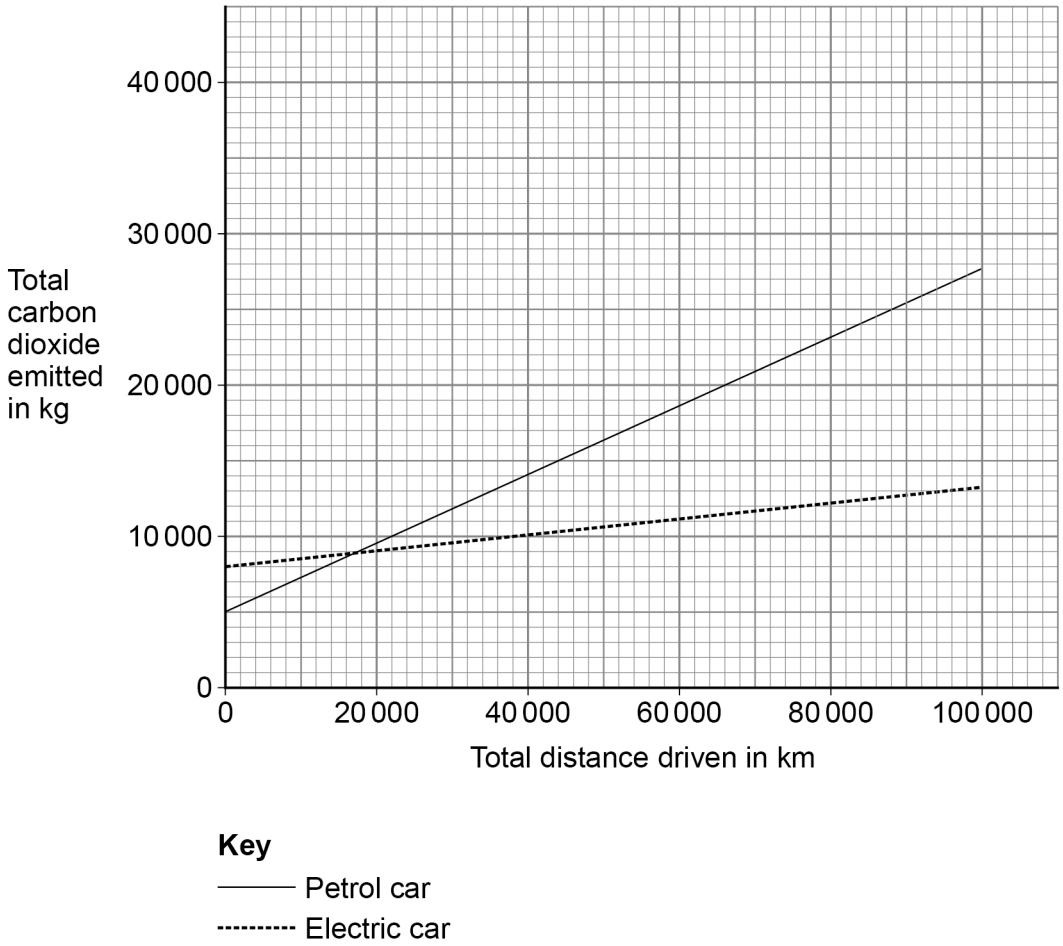


**0 4 . 2** What mass of carbon dioxide is produced during the manufacture of the electric car?

**[1 mark]**

Mass of carbon dioxide = _____ kg

**0 4 . 3** At one distance, the amount of carbon dioxide emitted by both cars is the same.

What is this distance?

**[1 mark]**

Distance = _____ km

Do not write outside the box

Some energy resources emit carbon dioxide when used to generate electricity.

**0 4 . 4** The battery-powered electric car does not emit carbon dioxide as it is driven.

Explain why more carbon dioxide is produced as the distance travelled by the electric car increases.

**[2 marks]**

_____

_____

_____

_____

**0 4 . 5** Which **two** of the following energy resources do **not** emit carbon dioxide when used to generate electricity?

**[2 marks]**

Tick (✓) **two** boxes.

Biofuel ☐

Nuclear ☐

Oil ☐

Solar ☐

Wood ☐

8

Do not write outside the box

**0 5** Scientists have used lasers to start a nuclear **fusion** reaction.

The scientists used the lasers to heat a small amount of an isotope of hydrogen.

**0 5 . 1** Describe what is meant by 'isotopes' of an element.

**[2 marks]**

**0 5 . 2** Explain how nuclear **fusion** releases energy.

**[3 marks]**

Do not write outside the box

**0 5 . 3** The fusion reaction releases large amounts of energy.

The fusion reaction takes place in a reactor.

Explain why the walls of the reactor should be made from a material with a very high specific heat capacity.

**[2 marks]**

**0 5 . 4** Nuclear fusion is safer than nuclear fission.

Nuclear **fission** can lead to an uncontrolled chain reaction.

Give **one** consequence of an uncontrolled chain reaction.

**[1 mark]**

8

**Turn over for the next question**

Do not write outside the box

**0 6** **Figure 8** shows a battery-powered hand warmer that contains a heating pad.

The battery transfers energy to increase the temperature of the heating pad.

**Figure 8**

**0 6 . 1** The heating pad has a mass of 0.20 kg.

When the hand warmer was switched on, the energy transferred to the heating pad was 8000 J.

specific heat capacity of heating pad = 1600 J/kg °C

Calculate the temperature increase of the heating pad.

Use the Physics Equations Sheet.

**[3 marks]**

Temperature increase = _____ °C

Do not write outside the box

**0 6 . 2** The hand warmer was powered by a 5.0 V battery.

The battery transferred 180 kJ of energy to the heating pad.

Calculate the charge flow through the battery.

Use the Physics Equations Sheet.

**[4 marks]**

Charge flow = _____ C

**Question 6 continues on the next page**

Do not write outside the box

**0 6 . 3** The circuit inside the hand warmer can be connected to a mobile phone to recharge the mobile phone.

**Figure 9** shows the circuit diagram when the hand warmer is connected to a mobile phone.

The heating pad of the hand warmer is represented by the resistor symbol.

**Figure 9**

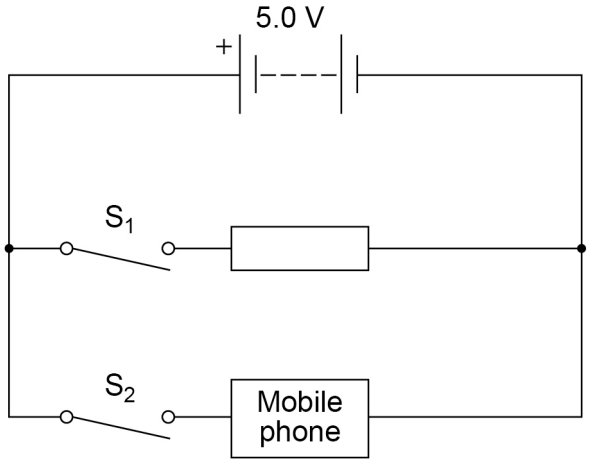


Explain how closing both switches $S_1$ and $S_2$ affects the power output of the battery compared with only closing switch $S_1$.

**[3 marks]**

10

Do not write outside the box

**0 7** Some atoms emit radiation.

**0 7 . 1** Why do scientists sometimes change the model used to describe the structure of the atom?

**[1 mark]**

Tick (✓) **one** box.

- Existing models use ideas that are old fashioned. ☐
- New evidence is discovered that existing models cannot explain. ☐
- Scientists need to develop new models every 100 years. ☐
- The public do not understand old models so new ones are created. ☐

**0 7 . 2** When radioactivity was discovered, the dangers of radiation were not known.

Some scientists were irradiated and contaminated while working with the radioactive materials.

Describe the difference between irradiation and radioactive contamination.

**[2 marks]**

_____

_____

_____

_____

**Question 7 continues on the next page**

Do not write outside the box

**0 7 . 3** Polonium-210 was one of the first radioactive elements to be discovered.

Polonium-210 (Po) decays into lead (Pb).

Complete the nuclear equation for polonium-210.

**[2 marks]**

$$^{210}_{\square}\mathrm{Po} \longrightarrow {}^{\square}_{82}\mathrm{Pb} + {}^{4}_{2}\mathrm{He}$$

**0 7 . 4** Polonium-210 has a half-life of 138 days.

A sample of polonium contains 256 000 atoms.

Calculate the time taken for the number of polonium-210 atoms to reach 16 000.

**[3 marks]**

Time taken = _____ days

Do not write outside the box

**0 7 . 5** A sample of polonium contains equal numbers of polonium-209 atoms and polonium-210 atoms.

Polonium-209 has a half-life of 125 **years**.

Polonium-210 has a half-life of 138 **days**.

Explain how the activity of polonium-209 compares with the activity of polonium-210 in this sample.

**[2 marks]**

_____

_____

_____

_____

10

**Turn over for the next question**

Do not write outside the box

**0 8** A scientist poured some liquid nitrogen into a container.

The container was then sealed.

**Figure 10** shows the container.

**Figure 10**

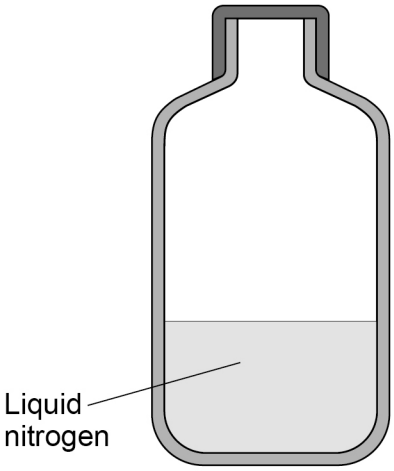


**0 8 . 1** The liquid nitrogen was at its boiling point.

When 9950 J of thermal energy was transferred to the liquid nitrogen, 50 g of the nitrogen turned into a gas.

Calculate the specific latent heat of vaporisation of nitrogen.

Use the Physics Equations Sheet.

**[4 marks]**

Specific latent heat of vaporisation = _____ J/kg

Do not write outside the box

**0 8 . 2** Explain how the internal energy of the nitrogen changed as the nitrogen turned from a liquid to a gas.

**[3 marks]**

**0 8 . 3** After the nitrogen had boiled, the temperature of the gas increased.

Explain how the pressure in the container changed as the temperature increased.

**[4 marks]**

11

Do not write outside the box

**0 9** **Figure 11** shows a garden water feature.

**Figure 11**

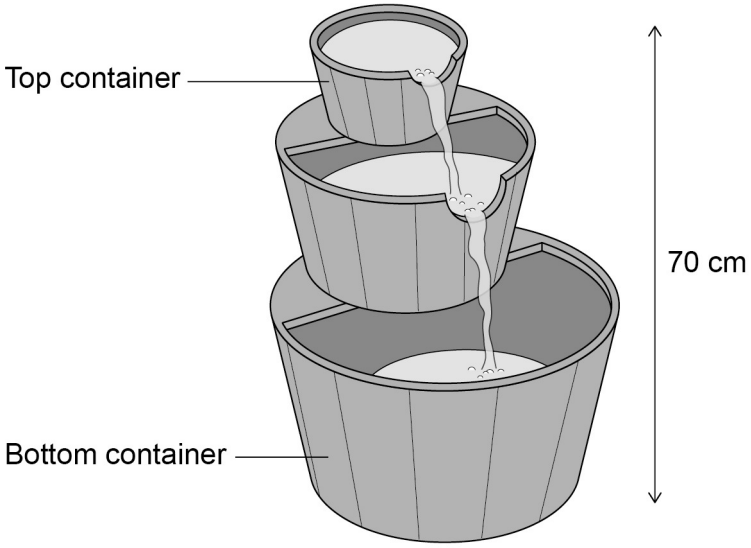


The water feature has an electric motor that pumps water from the bottom container to the top container.

**0 9 . 1** The pump transfers 0.343 J of gravitational potential energy to the water each second.

gravitational field strength = 9.8 N/kg

Determine the mass of water passing through the pump each second.

Use the Physics Equations Sheet.

**[4 marks]**

Mass = _____ kg

Do not write outside the box

**0 9 . 2** The power of the pump motor is 4.86 W.

The resistance of the pump motor is 6.0 Ω.

Calculate the charge flow through the motor in 30 minutes.

Use the Physics Equations Sheet.

**[6 marks]**

Charge flow = _____ C

**0 9 . 3** The pump motor breaks and is replaced with a new motor.

The new pump motor has the same power input, but has a greater efficiency.

Explain how the new pump motor would affect the flow of water in the water feature.

**[2 marks]**

12

Do not write outside the box

**1 0** **Figure 12** shows a device that accelerates a toy car at the start of a race track.

**Figure 12**

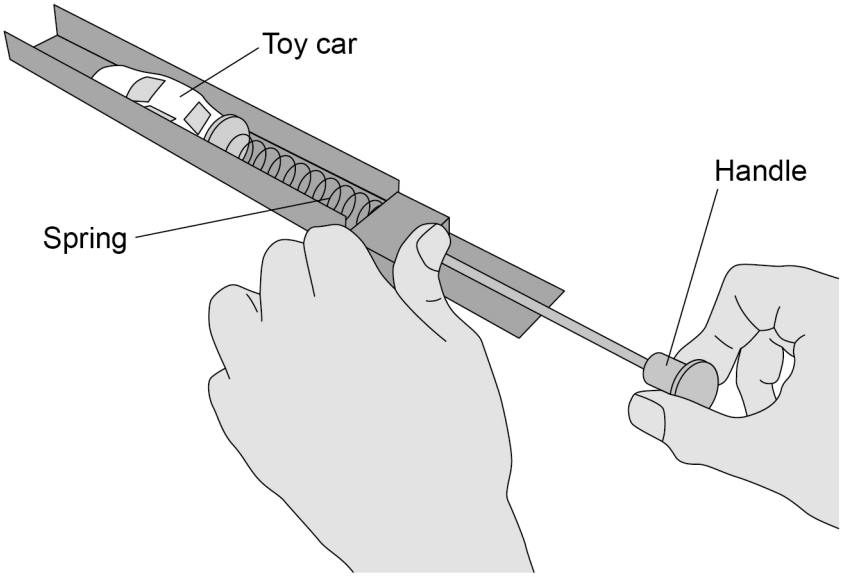

Do not write outside the box

**1 0 . 1** Pulling the handle compresses the spring in the device by 0.075 m.

When the handle is released, the energy stored in the compressed spring is transferred to the toy car.

spring constant = 64 N/m

mass of toy car = 0.052 kg

Calculate the maximum possible speed of the toy car just after the car starts to move.

Use the Physics Equations Sheet.

Give your answer to **2** significant figures.

**[6 marks]**

Maximum possible speed (2 significant figures) = _____ m/s

**Question 10 continues on the next page**

Do not write outside the box

**1 0 . 2** **Figure 13** shows the path of the toy car along a loop section of the race track.

**Figure 13**

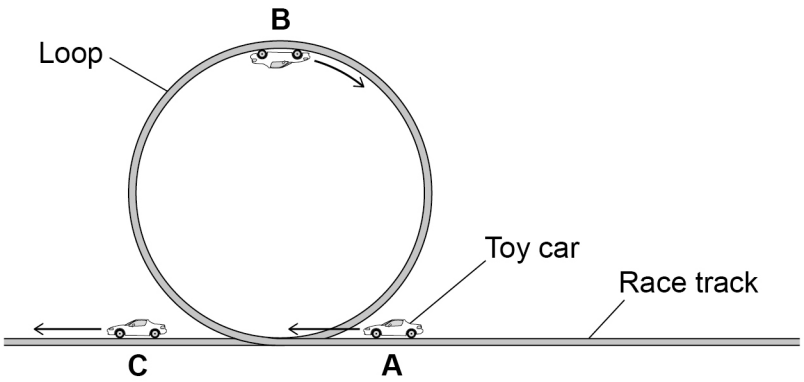


The car moves along the track from position **A** to position **B** and then to position **C**.

Describe how the energy stores of the car change as the car moves along the track from position **A** to position **C**.

Ignore the effects of friction and air resistance.

**[3 marks]**

Do not write outside the box

**1 0 . 3** At the end of the race track, the toy car passes through a light gate that measures the speed of the car.

Which **two** measurements are needed to determine the speed of the car?

**[2 marks]**

Tick (✓) **two** boxes.

Length of the toy car ☐

Mass of the toy car ☐

Temperature of the room ☐

Time for the toy car to pass the light gate ☐

Total length of the race track ☐

11

**END OF QUESTIONS**

Do not write outside the box

**There are no questions printed on this page**

**DO NOT WRITE ON THIS PAGE**
**ANSWER IN THE SPACES PROVIDED**

*Do not write outside the box*

| Question number | **Additional page, if required.**<br>**Write the question numbers in the left-hand margin.** |
|---|---|
| | |

*Do not write outside the box*

| Question number | **Additional page, if required.**<br>**Write the question numbers in the left-hand margin.** |
|---|---|
| | |
| | **Copyright information**<br><br>For confidentiality purposes, all acknowledgements of third-party copyright material are published in a separate booklet. This booklet is published after each live examination series and is available for free download from www.aqa.org.uk<br><br>Permission to reproduce all copyright material has been applied for. In some cases, efforts to contact copyright-holders may have been unsuccessful and AQA will be happy to rectify any omissions of acknowledgements. If you have any queries please contact the Copyright Team.<br><br>Copyright © 2025 AQA and its licensors. All rights reserved. |